US010367167B2

(12) **United States Patent**
Kamiya

(10) **Patent No.: US 10,367,167 B2**
(45) **Date of Patent: Jul. 30, 2019**

(54) **DISPLAY DEVICE**

(71) Applicant: **Japan Display Inc.**, Tokyo (JP)

(72) Inventor: **Akinori Kamiya**, Tokyo (JP)

(73) Assignee: **Japan Display Inc.**, Tokyo (JP)

(*) Notice: Subject to any disclaimer, the term of this patent is extended or adjusted under 35 U.S.C. 154(b) by 0 days.

(21) Appl. No.: **15/728,993**

(22) Filed: **Oct. 10, 2017**

(65) **Prior Publication Data**

US 2018/0047939 A1 Feb. 15, 2018

Related U.S. Application Data

(63) Continuation of application No. 15/335,525, filed on Oct. 27, 2016, now Pat. No. 9,818,979, which is a (Continued)

(30) **Foreign Application Priority Data**

Mar. 15, 2013 (JP) 2013-053469

(51) **Int. Cl.**
H01L 51/50 (2006.01)
H01L 51/52 (2006.01)
(Continued)

(52) **U.S. Cl.**
CPC ***H01L 51/5253*** (2013.01); ***H01L 27/3244*** (2013.01); ***H01L 27/3246*** (2013.01);
(Continued)

(58) **Field of Classification Search**
CPC H01L 51/5237; H01L 51/5253; H01L 2251/5338; H01L 27/3244; H01L 27/3246; H01L 51/5256
(Continued)

(56) **References Cited**

U.S. PATENT DOCUMENTS

9,159,951 B2 10/2015 Kamiya
2007/0132381 A1 6/2007 Hayashi et al.
(Continued)

FOREIGN PATENT DOCUMENTS

CN 101847651 A 9/2010
CN 102084515 A 6/2011
(Continued)

OTHER PUBLICATIONS

Korean Office Action dated Feb. 3, 2015 for corresponding Korean Patent Application No. 10-2014-0030349.
(Continued)

Primary Examiner — Long K Tran
(74) *Attorney, Agent, or Firm* — Michael Best & Friedrich LLP

(57) **ABSTRACT**

The organic electroluminescence display device of an embodiment of the present invention includes a substrate, a plurality of pixels formed on the substrate, and a sealing film that covers the plurality of pixels. The sealing film includes a first barrier layer, a base layer covering the top surface of the first barrier layer, an inter layer locally formed on the top surface of the base layer, and a second barrier layer covering the top surface of the base layer and the top surface of the inter layer. The inter layer is formed so as to cover a step or the top surface of the base layer.

16 Claims, 11 Drawing Sheets

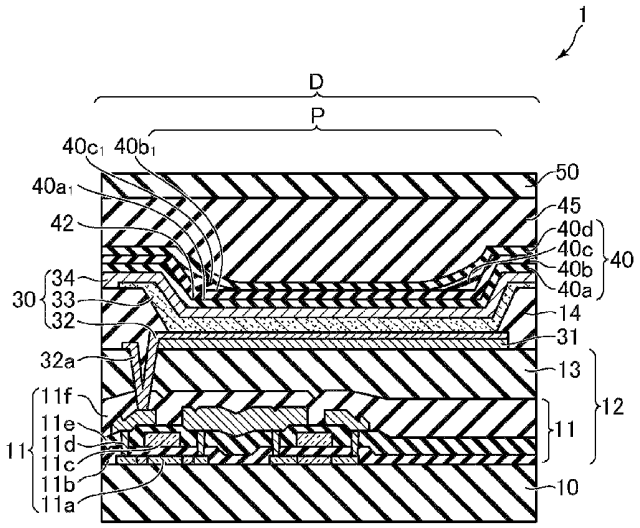

Related U.S. Application Data

continuation of application No. 14/847,869, filed on Sep. 8, 2015, now Pat. No. 9,515,289, which is a continuation of application No. 14/210,907, filed on Mar. 14, 2014, now Pat. No. 9,159,951.

(51) **Int. Cl.**
H01L 27/32 (2006.01)
H01L 51/56 (2006.01)

(52) **U.S. Cl.**
CPC ***H01L 51/5016*** (2013.01); ***H01L 51/5056*** (2013.01); ***H01L 51/5072*** (2013.01); ***H01L 51/5088*** (2013.01); ***H01L 51/5092*** (2013.01); ***H01L 51/5234*** (2013.01); ***H01L 51/5271*** (2013.01); ***H01L 51/56*** (2013.01); *H01L 51/5237* (2013.01)

(58) **Field of Classification Search**
USPC 257/40
See application file for complete search history.

(56) **References Cited**

U.S. PATENT DOCUMENTS

2010/0078627	A1	4/2010	Yoshinaga	
2010/0244005	A1	9/2010	Gyoda	
2010/0253215	A1	10/2010	Fukagawa et al.	
2011/0052836	A1*	3/2011	Kim	H01L 51/52 428/1.1
2013/0037835	A1	2/2013	Lee et al.	
2014/0021499	A1*	1/2014	Jang	H01L 51/0097 257/98
2014/0145163	A1	5/2014	Lee	
2014/0323006	A1*	10/2014	Song	H01L 51/003 445/24

FOREIGN PATENT DOCUMENTS

JP	2002-261046	A	9/2002
JP	2007-157606	A	6/2007
JP	2007-250370	A	9/2007
JP	4303591	B2	7/2009
JP	2009-266922	A	11/2009
JP	2010-257957	A	11/2010
KR	10-2010-0108267	A	10/2010
WO	03/028903	A2	4/2003

OTHER PUBLICATIONS

Chinese Office Action dated Dec. 11, 2015 for corresponding Chinese Application No. 201410095827.5.
Korean Office Action dated Mar. 19, 2016 for corresponding Korean Application No. 10-2016-0009841.
Japanese Office Action dated Sep. 6, 2016 for corresponding Japanese Application No. 2013-053469 with partial translation.
European Search Report dated Dec. 8, 2017 for corresponding European Patent Application No. 14159532.2.

* cited by examiner

FIG.1

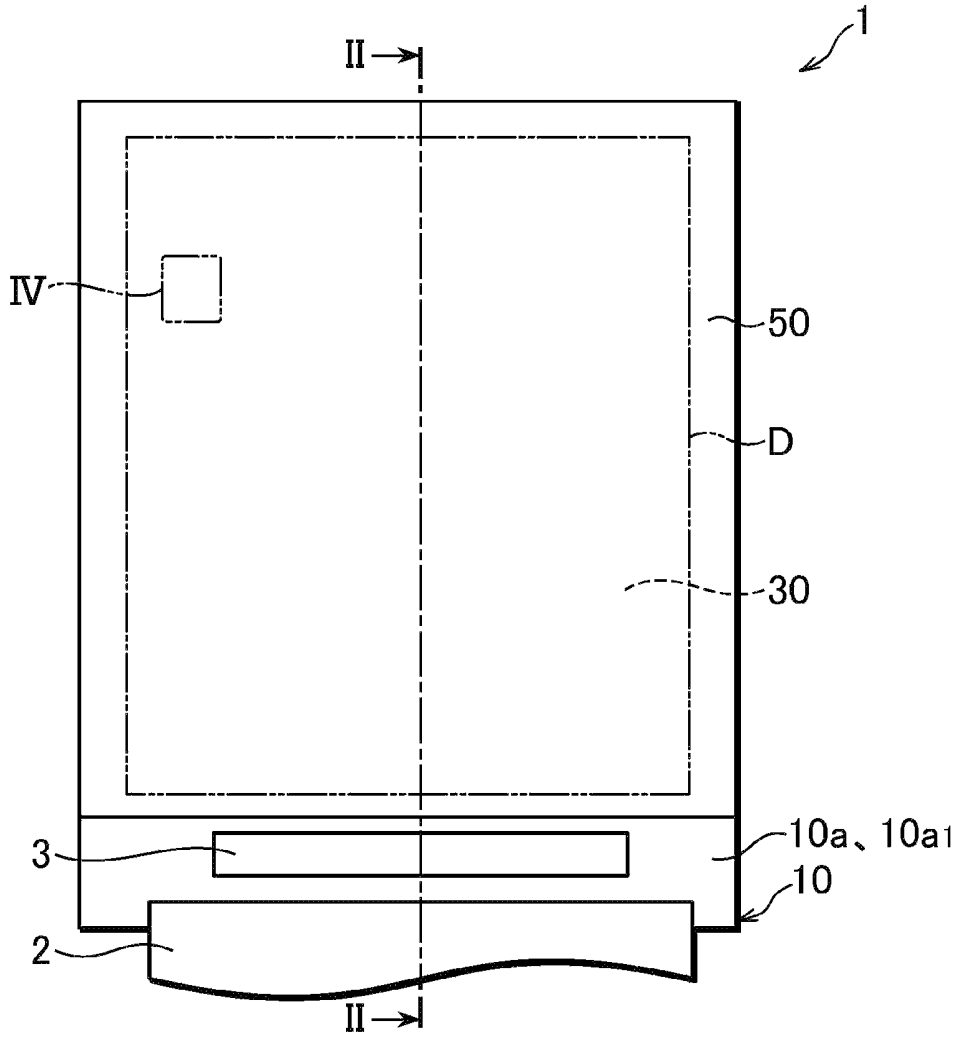

FIG.2

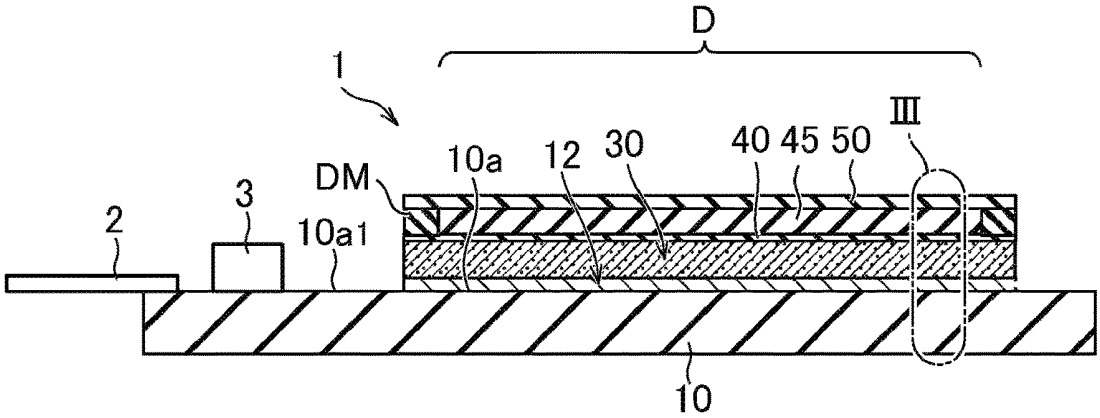

FIG.3

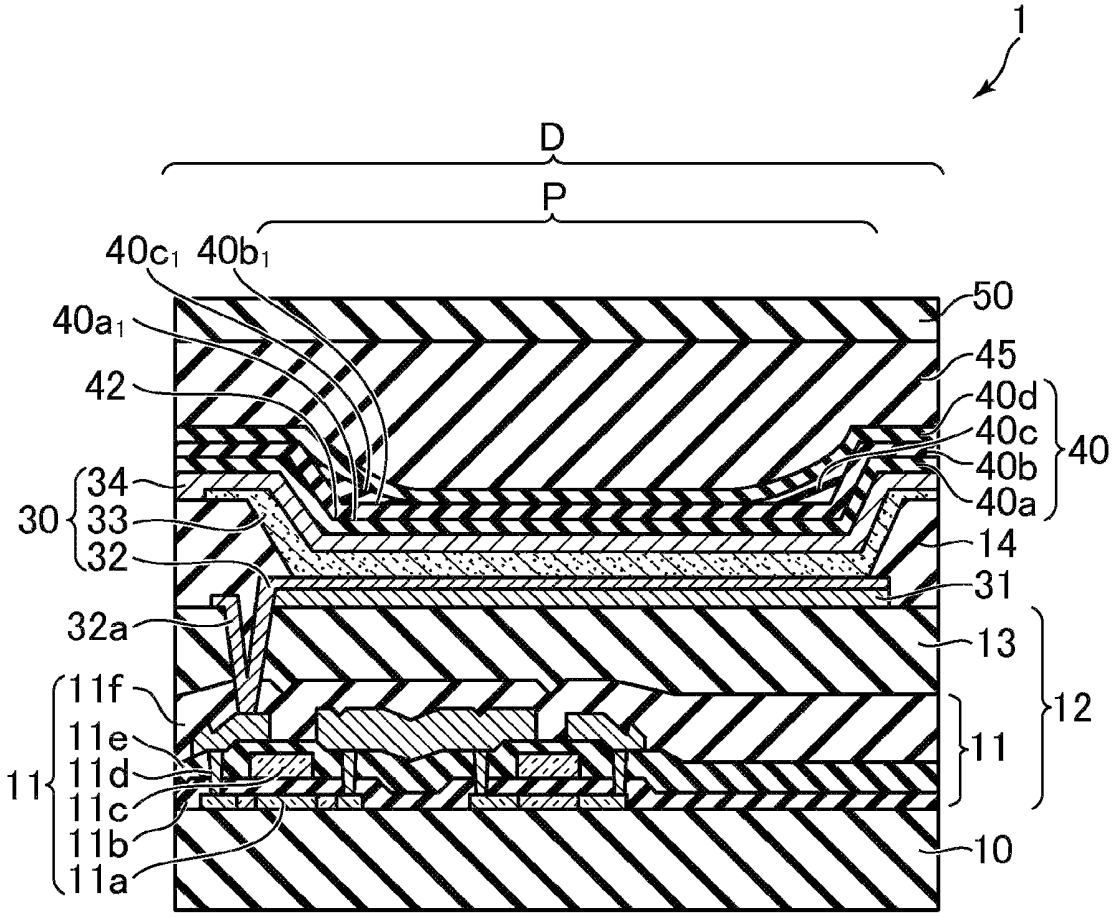
1
D
P
40c1
40b1
40a1
42
50
45
40d
40c
40b
40a
40
34
33
32
30
14
31
32a
13
12
11f
11e
11d
11c
11b
11a
11
10

FIG.4

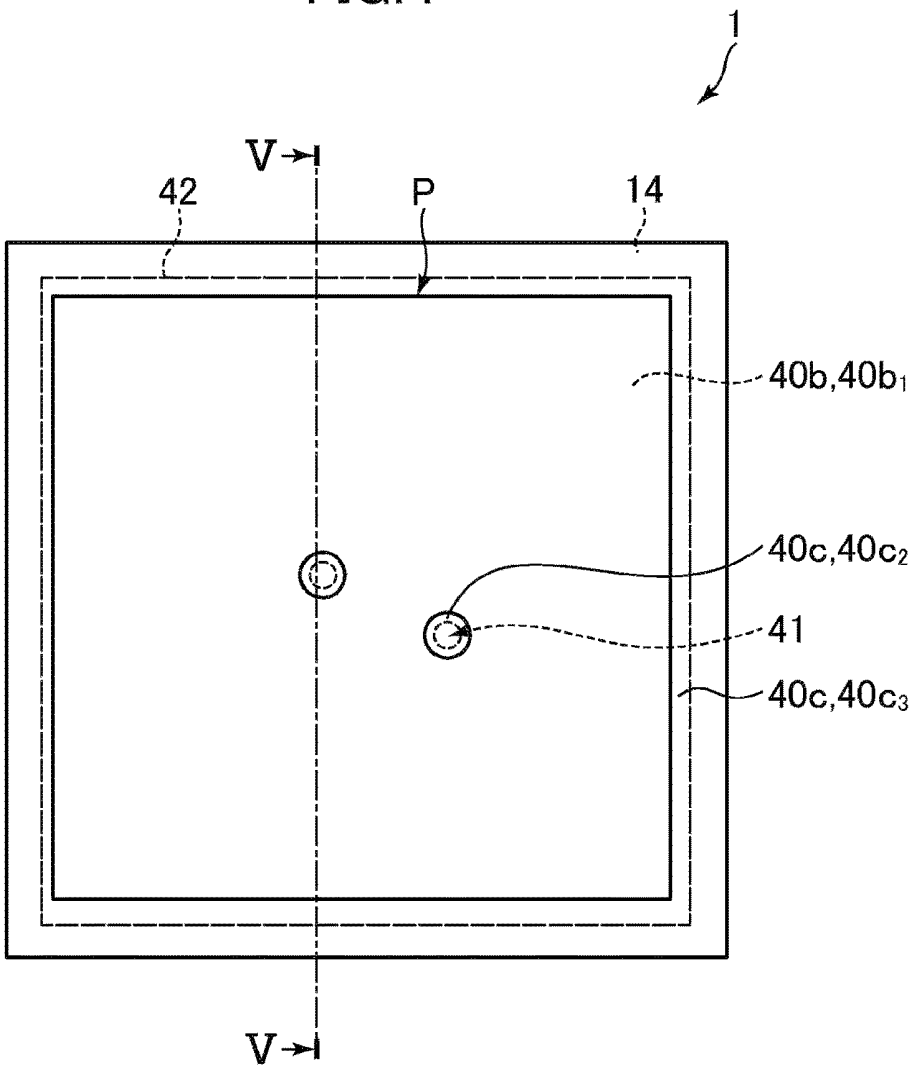

FIG.5

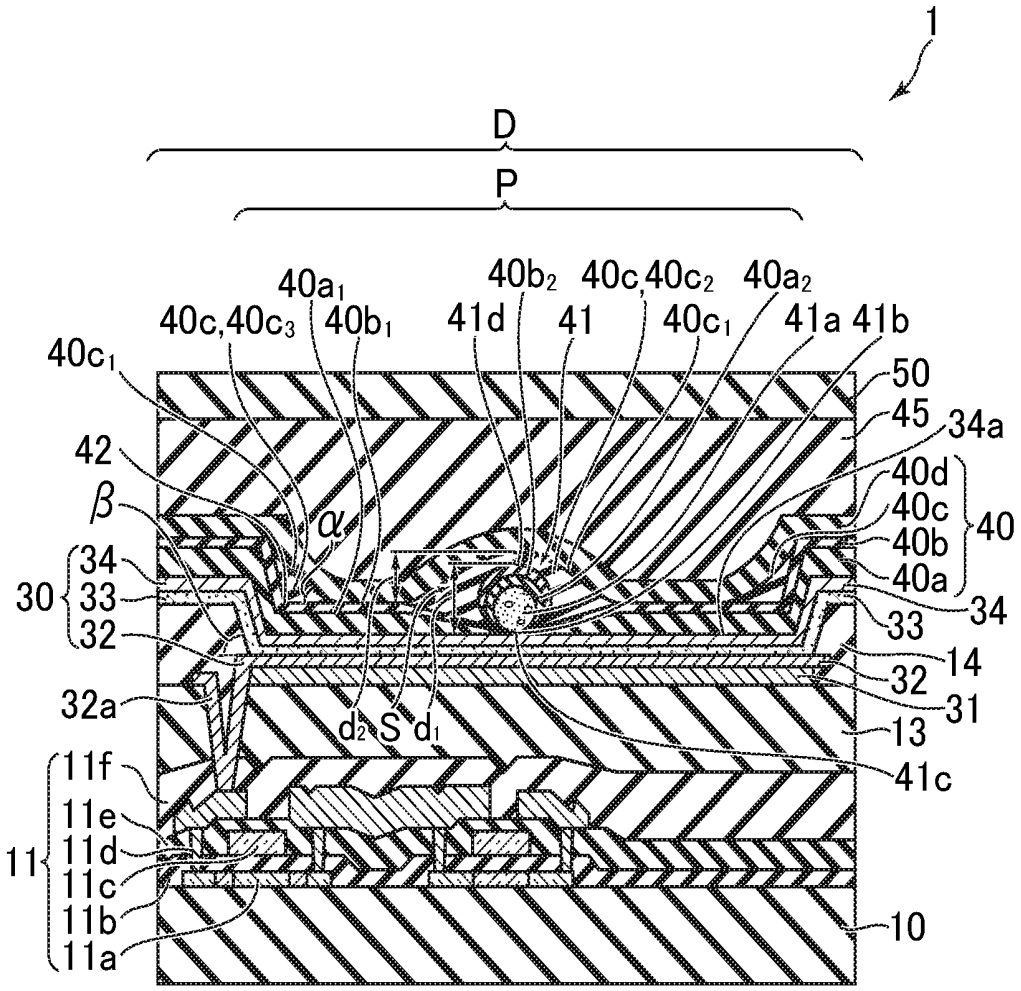
1
D
P
40a1
40b2
40c,40c2
40a2
40c,40c3
40b1
41d
41
40c1
41a
41b
40c1
50
45
34a
42
β
α
40d
40c
40b
40a
40
34
33
32
30
34
33
14
32
31
32a
d2
S
d1
13
41c
11f
11e
11d
11c
11b
11a
11
10

FIG.6

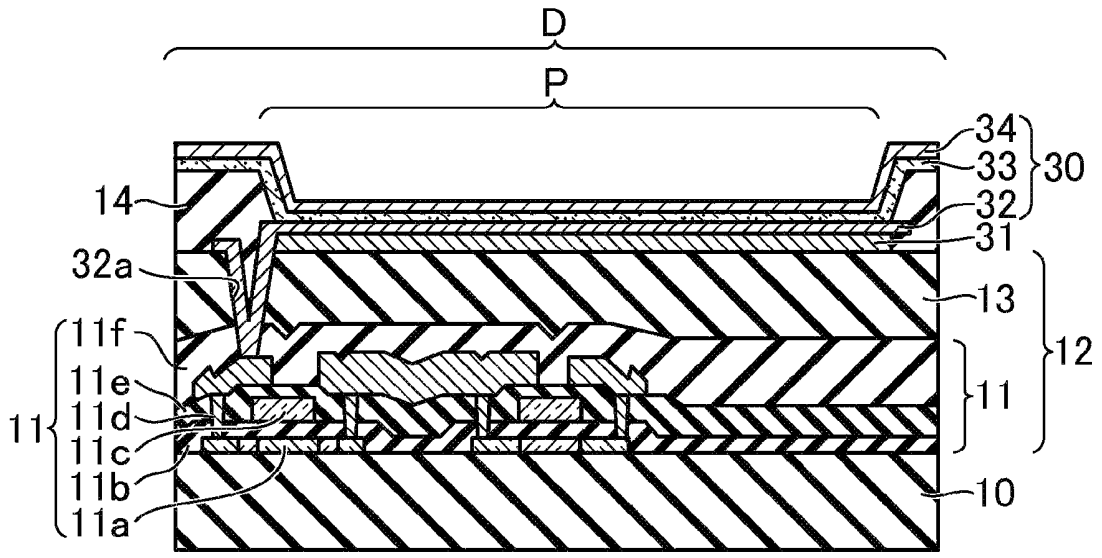

FIG.7

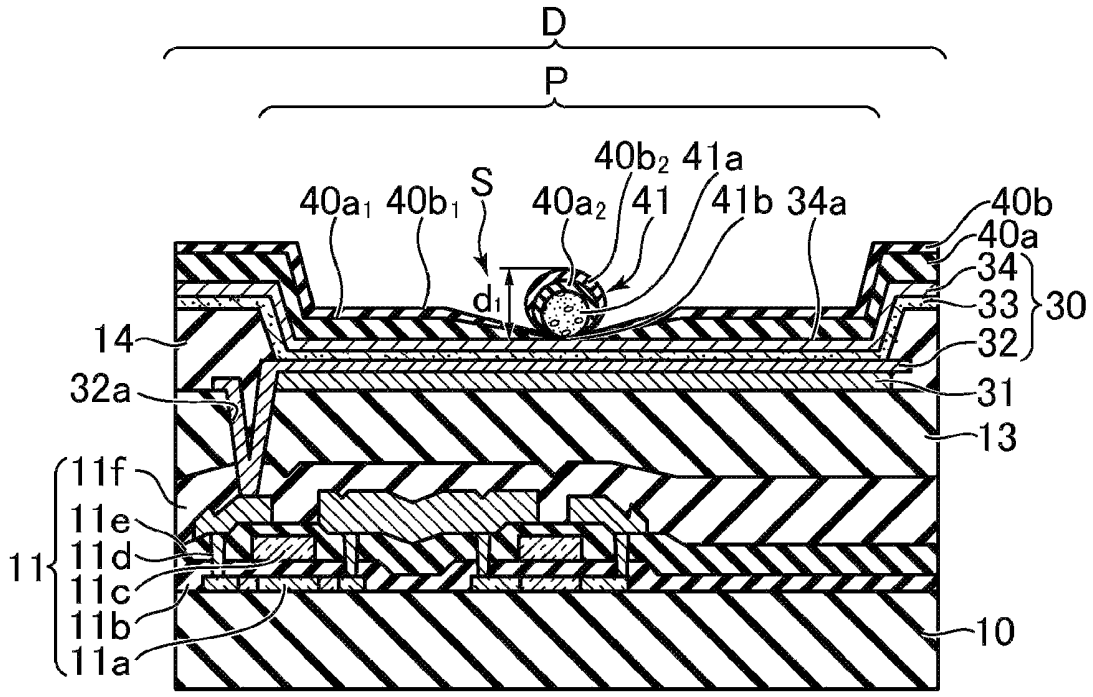
D
P
S
40a1
40b1
40b2
41a
40a2
41
41b
34a
40b
40a
34
33
30
32
31
13
10
14
32a
11f
11e
11d
11c
11b
11a
11
d1

FIG.8

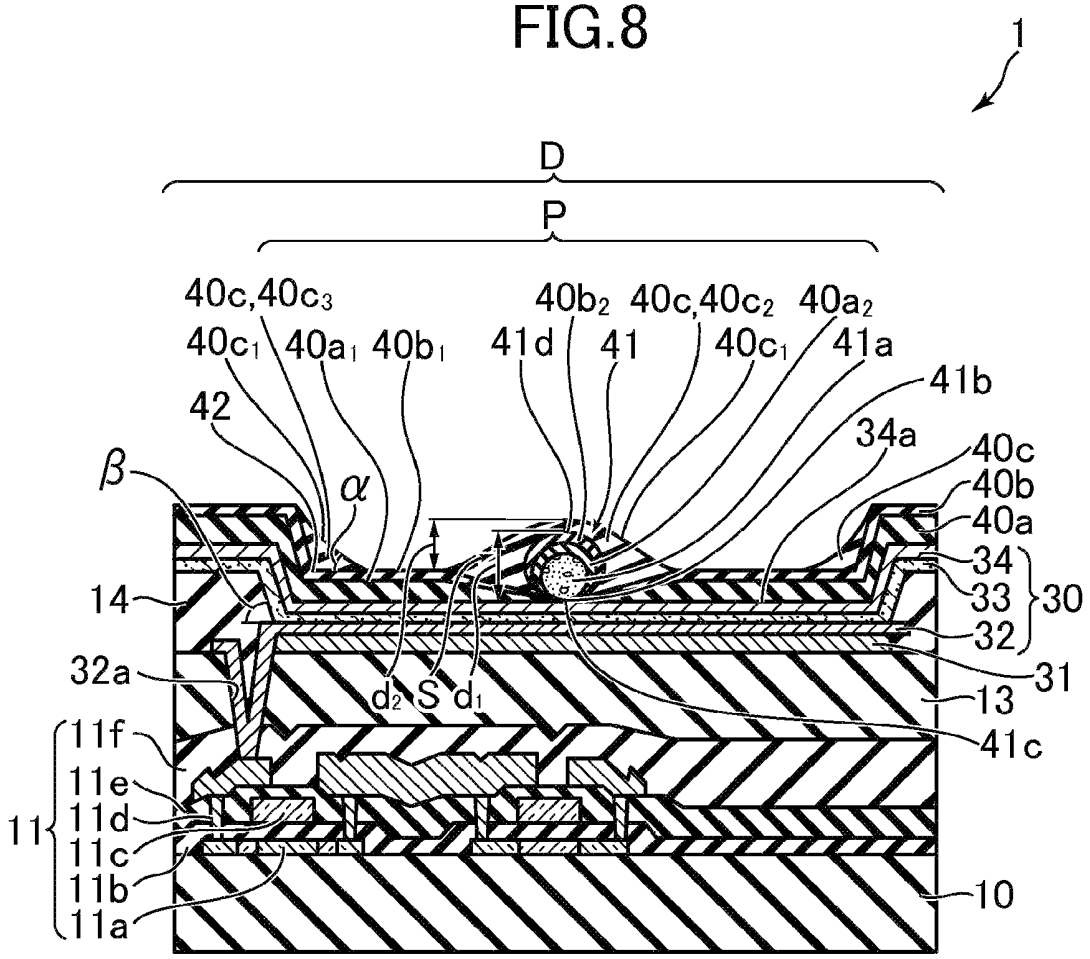
1
D
P
40c,40c3
40c1
40a1
40b1
42
β
α
40b2
40c,40c2
40a2
41d
41
40c1
41a
41b
34a
40c
40b
40a
34
33
30
32
31
14
32a
d2
S
d1
13
41c
11f
11e
11d
11c
11b
11a
11
10

FIG.9

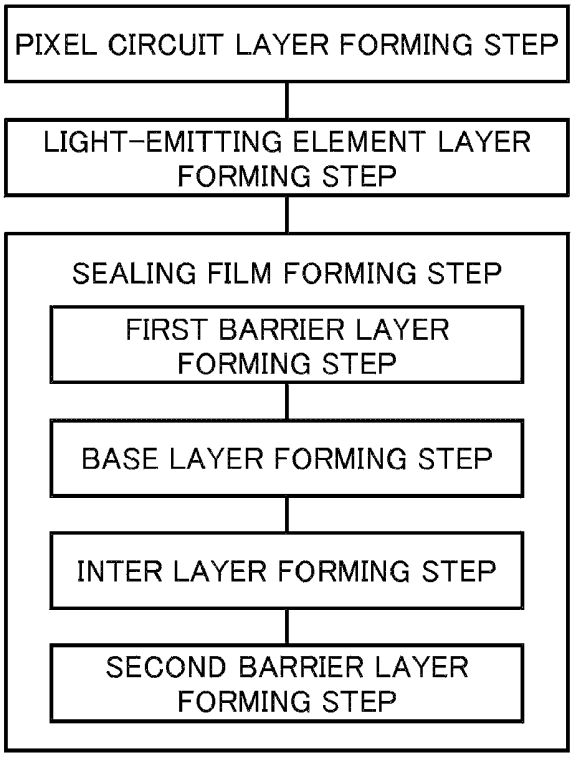
PIXEL CIRCUIT LAYER FORMING STEP
LIGHT-EMITTING ELEMENT LAYER FORMING STEP
SEALING FILM FORMING STEP
FIRST BARRIER LAYER FORMING STEP
BASE LAYER FORMING STEP
INTER LAYER FORMING STEP
SECOND BARRIER LAYER FORMING STEP

FIG.10

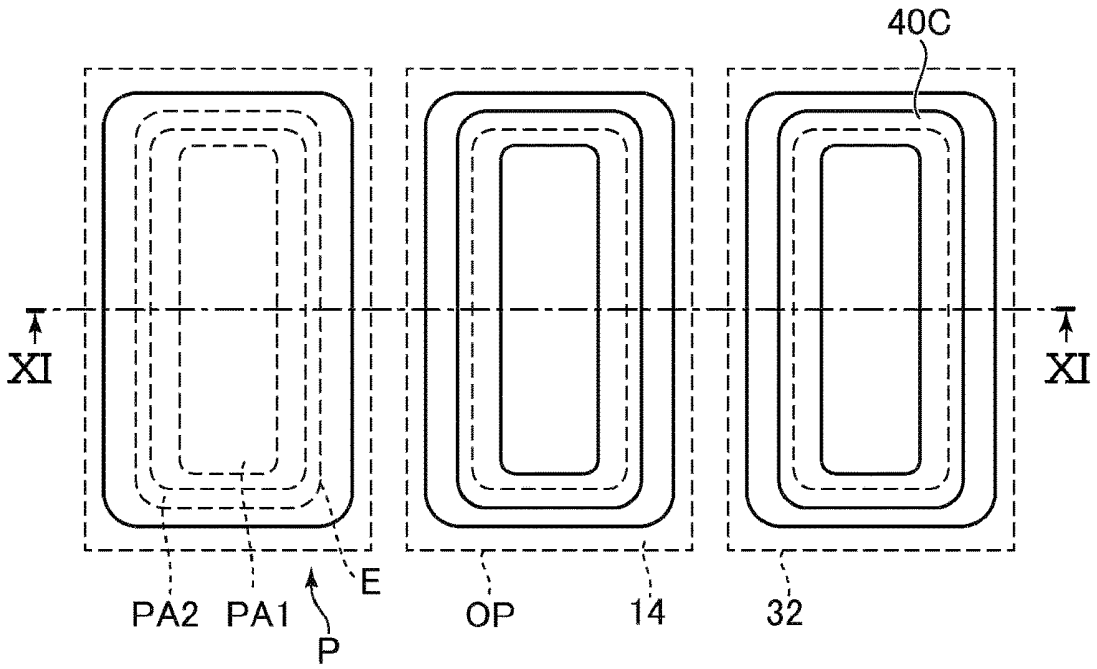

FIG.11

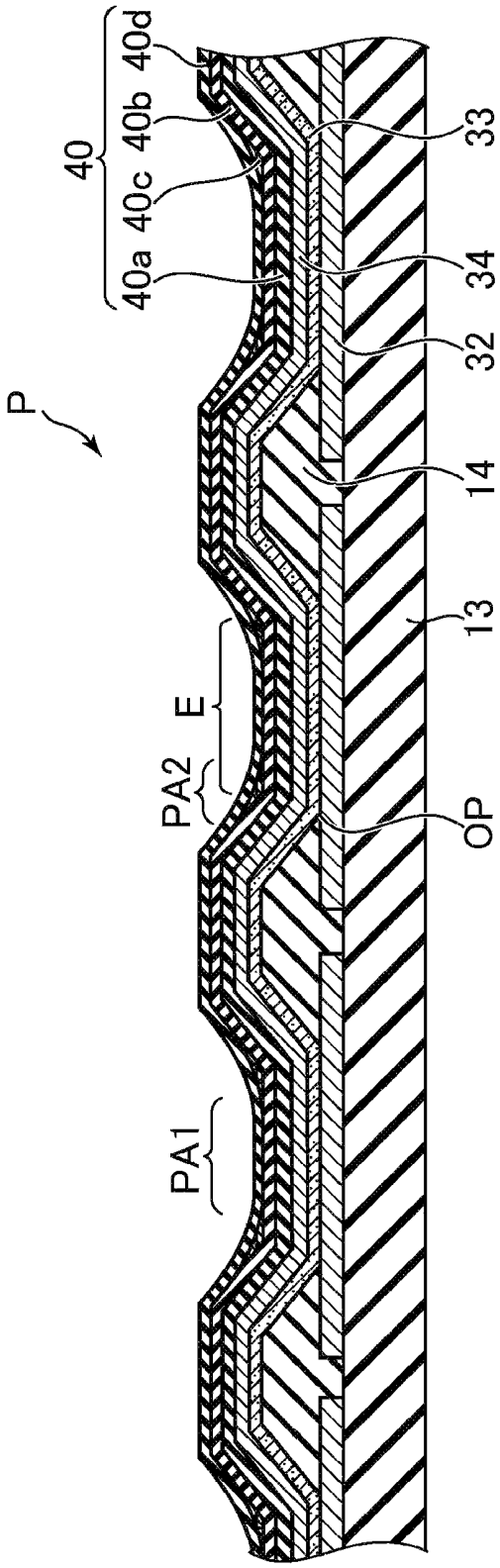

DISPLAY DEVICE

CROSS-REFERENCE TO RELATED APPLICATIONS

This application is a continuation of U.S. application Ser. No. 15/335,525 filed on Oct. 27, 2016, which, in turn, is a continuation of U.S. application Ser. No. 14/847,869 (now U.S. Pat. No. 9,515,289) filed on Sep. 8, 2015, which, in turn, is a continuation of Ser. No. 14/210,907 (now U.S. Pat. No. 9,159,951) filed on Mar. 14, 2014. Further, this application claims priority from Japanese application JP 2013-53469 filed on Mar. 15, 2013, the contents of which are hereby incorporated by reference into this application.

BACKGROUND OF THE INVENTION

1. Field of the Invention

The present invention relates to organic electroluminescence display devices, and organic electroluminescence display device manufacturing methods.

2. Description of the Related Art

The organic electroluminescence light-emitting element has attracted interest as a thin, light-weight luminescent source, and image display devices provided with large numbers of organic electroluminescence light-emitting elements have been developed. Such an organic electroluminescence light-emitting element is structured to include an organic layer having a light-emitting layer, and the organic layer is sandwiched between an anode and a cathode.

An organic electroluminescence display device configured to include a sealing film that covers the top surface of an organic layer is proposed. The sealing film is provided as a laminate of a planarizing decoupling layer, and a barrier layer that prevents entry of moisture. The outer edge of the decoupling layer is also covered with the barrier layer.

In the configuration of related art, there is a possibility of moisture permeating into the decoupling layer when the barrier layer covering the top surface of the decoupling layer is damaged by, for example, scratch. Further, any irregularities formed in the top surface of the decoupling layer prevent deposition of the barrier layer around these irregularities during the formation of the barrier layer. This may cause moisture permeation in the decoupling layer through the areas around the irregularities.

The sealing film is commonly provided for a plurality of pixels, and accordingly any moisture permeating the decoupling layer diffuses over a plurality of pixels. The decoupling layer affected by the moisture diffusion swells, and detaches itself from the barrier layer. This causes problems such as low luminance and low strength in the organic electroluminescence display device. Indeed, it has been difficult to improve the brightness and the reliability of an organic electroluminescence display device.

SUMMARY OF THE INVENTION

The present invention has been made under these circumstances, and it is an object of the present invention to provide an organic electroluminescence display device having improved brightness and reliability.

(1) An organic electroluminescence display device according to an aspect of the present invention includes:

a substrate;

a plurality of pixels formed on the substrate; and

a sealing film that covers the plurality of pixels, and that includes:

a first barrier layer;

a base layer that covers a top surface of the first barrier layer;

an inter layer locally formed on a top surface of the base layer; and

a second barrier layer that covers the top surface of the base layer and a top surface of the inter layer,

wherein the inter layer is formed so as to cover a step on the top surface of the base layer.

(2) In the organic electroluminescence display device of (1), the inter layer formed in the plurality of pixels may be separated from one another between adjacent pixels.

(3) In the organic electroluminescence display device of (1) or (2), the inter layer may be made of organic material.

(4) In the organic electroluminescence display device of (1) or (2), the first barrier layer may be made of Si.

(5) In the organic electroluminescence display device of (1) or (2), the second barrier layer may be made of Si.

(6) An organic electroluminescence display device according to another aspect of the present invention includes pixels formed on a substrate, the pixels each including:

a thin film transistor;

a pixel electrode controlled by the thin film transistor;

an organic layer disposed on the pixel electrode; and

a counter electrode disposed on the organic layer,

wherein the pixels are covered with a sealing film, and

wherein the sealing film on the pixels includes:

a first region where a first barrier layer, a base layer, and a second barrier layer are laminated; and

a second region where the first barrier layer, the base layer, an inter layer, and the second barrier layer are laminated.

(7) In the organic electroluminescence display device of (6), the pixel electrode may have an end portion covered with a pixel isolation film, the first region may overlie an emission region of the pixel, and the second region may partially overlie the pixel isolation film.

(8) In the organic electroluminescence display device of (6), the pixel electrode may have an end portion covered with a pixel isolation film, and a contact angle of the inter layer with respect to the base film in the emission region may be smaller than a contact angle of the pixel isolation film with respect to the pixel electrode.

(9) A method for manufacturing an organic electroluminescence display device according to another aspect of the present invention includes the steps of:

forming a plurality of organic electroluminescence light-emitting element on a substrate, the plurality of organic electroluminescence light-emitting elements being formed for each of a plurality of pixels; and

forming a sealing film so as to cover the organic electroluminescence light-emitting elements over the plurality of pixels,

wherein the step of forming the sealing film includes the steps of:

forming a first barrier layer;

forming a base layer that covers a top surface of the first barrier layer;

forming an inter layer locally on a top surface of the base layer; and

forming a second barrier layer that covers the top surface of the base layer and a top surface of the inter layer,

wherein the affinity between the material of the base layer and the material of the inter layer is higher than the

affinity between the material of the first barrier layer and the material of the inter layer, and

wherein the inter layer formed in the inter layer forming step covers a step created by local protrusion in part of the top surface of the base layer relative to the top surface of the base layer.

(10) In the method of (9), the inter layer formed in the inter layer forming step may be separated from one another between adjacent pixels.

(11) In the method of (9) or (10), the inter layer may be made of organic material.

(12) In the method of (9) or (10), the first barrier layer may be made of Si.

(13) In the method of (9) or (10), the second barrier layer may be made of Si.

BRIEF DESCRIPTION OF THE DRAWINGS

FIG. **1** is a schematic plan view of an organic electroluminescence display device according to an embodiment of the present invention.

FIG. **2** is a schematic cross sectional view of the organic electroluminescence display device of FIG. **1** at line II-II.

FIG. **3** is a partially magnified view of region III of the organic electroluminescence display device shown in FIG. **2**.

FIG. **4** is a partially magnified view of region IV of the organic electroluminescence display device shown in FIG. **1**.

FIG. **5** is a schematic cross sectional view of the organic electroluminescence display device of FIG. **4** at line V-V.

FIG. **6** is a schematic cross sectional view at line V-V, explaining an organic electroluminescence display device manufacturing method according to an embodiment of the present invention.

FIG. **7** is a schematic cross sectional view at line V-V, explaining the organic electroluminescence display device manufacturing method according to the embodiment of the present invention.

FIG. **8** is a schematic cross sectional view at line V-V, explaining the organic electroluminescence display device manufacturing method according to the embodiment of the present invention.

FIG. **9** is a flowchart explaining the organic electroluminescence display device manufacturing method according to the embodiment of the present invention.

FIG. **10** is a plan view of a pixel section of the organic electroluminescence display device of the embodiment of the present invention.

FIG. **11** is a schematic cross sectional view of the organic electroluminescence display device of FIG. **10** at line XI-XI.

DETAILED DESCRIPTION OF THE INVENTION

An organic electroluminescence display device **1** as an embodiment of the present invention is described below with reference to the accompanying drawings. In the drawings referred to in the following descriptions, certain features may be enlarged for illustrative purposes, and the dimensions of each constituting element do not necessarily reflect the actual scale. Further, materials and other features exemplified in the following descriptions are presented for merely illustrative purposes, and each constituting element is not limited to what is described below, and may be applied in many variations within the gist of the present invention.

FIG. **1** is a schematic plan view of the organic electroluminescence display device **1** according to the embodiment of the present invention. FIG. **2** is a schematic cross sectional view of the organic electroluminescence display device **1** of FIG. **1** at line II-II.

As illustrated in FIG. **2**, the organic electroluminescence display device **1** according to the present embodiment includes a substrate **10**, a circuit layer **12**, an organic electroluminescence light-emitting element **30**, a sealing film **40**, and a counter substrate **50** disposed on the sealing film **40** via a filler **45**.

The substrate **10** is an insulating substrate, and has a top surface **10***a* on which a thin film transistor **11** (described later), and the organic electroluminescence light-emitting element **30** are formed. The organic electroluminescence light-emitting element **30** is provided above the top surface **10***a* of the substrate **10**. Note that the organic electroluminescence light-emitting element **30** shown in the figure is one of a plurality of organic electroluminescence light-emitting elements **30** provided above the top surface **10***a* of the substrate **10**, and is not detailed in FIG. **2** for convenience of explanation.

As illustrated in FIG. **1**, the organic electroluminescence light-emitting element **30** is provided, for example, in a display region D having a smaller outer perimeter than the substrate **10** in planar view. A blockade DM for blocking the filler **45** is disposed in an outer region of the display region D, for example, as illustrated in FIG. **2**. Wires such as control signal lines, data signal lines, and power lines (not illustrated) are provided on the substrate **10** in regions corresponding to the display region D. A multiplicity of pixels is orderly disposed in the display region D, for example, in a matrix.

The substrate **10** is connected to a flexible circuit board **2**, and a driver **3** is provided in a region **10***a***1** on the top surface **10***a* of the substrate **10** where the organic electroluminescence light-emitting element **30** is not formed. The driver **3** receives image data from outside of the organic electroluminescence display device **1** via the flexible circuit board **2**. Upon receiving image data, the driver **3** supplies a voltage signal to the organic electroluminescence light-emitting element **30** via data lines (not illustrated), and the voltage signal is applied to each pixel.

The configuration of the display region D of the organic electroluminescence display device **1** is described below in greater detail. FIG. **3** is a partially magnified view of region III of the organic electroluminescence display device **1** shown in FIG. **2**. Region III corresponds to a single pixel P in the display region D. The circuit layer **12**, the organic electroluminescence light-emitting element **30**, the sealing film **40**, the filler **45**, and the counter substrate **50** are laminated on the substrate **10** in region III.

The circuit layer **12** is a layer in which an electrical circuit for controlling the amount of current flow to each pixel P is orderly disposed. The circuit layer **12** includes, for example, the thin film transistor **11**, and a passivation film **13**.

The thin film transistor **11** is provided to drive the organic electroluminescence light-emitting element **30**, and is provided for each pixel P on the substrate **10**. Specifically, the thin film transistors **11** is configured from, for example, a polysilicon semiconductor layer **11***a*, a gate insulating layer **11***b*, a gate electrode **11***c*, a source-drain electrode **11***d*, a first insulating film **11***e*, and a second insulating film **11***f*.

The passivation film **13** is formed so as to cover the thin film transistors **11**. By being formed on the thin film transistors **11**, the passivation film **13** provides electrical insulation between the adjacent thin film transistors **11**, and

between the thin film transistor **11** and the organic electroluminescence light-emitting element **30**. The passivation film **13** has a contact hole **32***a* formed for each pixel P to connect the thin film transistor **11** to the organic electroluminescence light-emitting element **30**. The passivation film **13** is made of an insulating material, for example, such as SiO_2, SiN, acryl, and polyimide. The top surface of the passivation film **13** can be planarized when the passivation film **13** is made of an organic polymer resin such as acryl and polyimide. This makes it easier to form the organic electroluminescence light-emitting element **30**.

The configuration of the circuit layer **12** is not limited to this, and may appropriately include other components such as an insulating layer, scan signal lines, video signal lines, power lines, and ground lines.

A reflecting film **31** may be formed in a matrix in a region of the passivation film **13** corresponding to each pixel P. The reflecting film **31** is provided to reflect the emitted light from the organic electroluminescence light-emitting element **30** toward the sealing film **40** side. Desirably, the reflectance of the reflecting film **31** should be made as high as possible, and a metal film of, for example, aluminum or silver (Ag) is used.

For example, more than one organic electroluminescence light-emitting element **30** is formed on the passivation film **13**. The organic electroluminescence light-emitting element **30** includes a pixel electrode (anode) **32** controlled by the thin film transistor **11**; an organic layer **33** that has at least a light-emitting layer, and is disposed on the pixel electrode **32**; and a counter electrode (cathode) **34** formed so as to cover the organic layer **33**. With these members, the organic electroluminescence light-emitting element **30** serves as a luminescent source. The present embodiment is described through the case where the pixel electrode **32** and the counter electrode **34** are anode and cathode, respectively. However, the pixel electrode **32** and the counter electrode **34** may be provided as cathode and anode, respectively.

The anode **32** is formed in a matrix, corresponding to each pixel P. The anode **32** is connected to the drain electrode **11***d* of the thin film transistor **11** via the contact hole **32***a*. With this configuration, the anode **32** is electrically connected to the driving thin film transistor **11**, and the drive current supplied from the thin film transistor **11** is fed to the organic layer **33** via the anode **32**.

The anode **32** is made of translucent conductive material. Specifically, for example, ITO (Indium Tin Oxide) is preferably used as material of the anode **32**. It is also possible to use other translucent conductive materials, for example, such as IZO (indium zinc oxide), tin oxide, zinc oxide, indium oxide, and aluminum oxide. The anode **32** is in contact with the hole injection layer (described later) of the organic layer **33**, and should preferably be made of materials having large work functions.

Note that the reflecting film **31** becomes part of the anode **32** when the reflecting film **31** is made of metal such as silver, and is in contact with the anode **32**.

A pixel isolation film **14** is formed between the adjacent anodes **32**. The pixel isolation film **14** serves to prevent the adjacent anodes **32** from contacting each other, and to prevent a current leak between the anode **32** and the cathode **34**. The pixel isolation film **14** is formed, for example, along the boundary of the adjacent pixels P in planar view, and covers the end portion on the outer periphery of the anode **32**. The anode **32** and the organic layer **33** contact each other in the opening of the pixel isolation film **14**. The pixel isolation film **14** is made of insulating material, specifically, for example, a photosensitive resin composition.

The organic layer **33** having a light-emitting layer is formed so as to cover the anode **32**. The organic layer **33** has a light emitting function. The emitted light may be white, or other colors. The organic layer **33** may be provided for each pixel P, or may be formed so as to cover the whole surface of the pixel P region of the display region D.

The organic layer **33** includes, for example, a hole injection layer, a hole transport layer, a light-emitting layer, an electron transport layer, and an electron injection layer, laminated in this order from the anode **32** side. The laminate structure of the organic layer **33** is not limited to this, and the organic layer **33** is not limited to a specific laminate structure, as long as it includes at least a light-emitting layer.

The light-emitting layer is configured from, for example, an organic electroluminescence material that emits light upon recombination of holes and electrons. For example, such organic electroluminescence material may be a common organic light-emitting material. Specific examples include known fluorescent low-molecular materials that can emit light from the singlet state, for example, such as coumalin, perylene, pyran, anthrone, porphyrin, quinacridone, N,N'-dialkyl-substituted quinacridone, naphthalimide, and N,N'-diaryl-substituted pyrrolopyrrole materials. Known phosphorescent low-molecular materials that can emit light from the triplet state, for example, such as rare-earth metal complex materials also may be used.

The cathode **34** is formed so as to cover the organic layer **33**. The cathode **34** is formed so as to cover the whole surface of the pixel P region of the display region D, instead of being independently provided for each pixel P. With this configuration, the cathode **34** is commonly in contact with each organic layer **33** of the organic electroluminescence light-emitting elements **30**.

The cathode **34** is made of translucent conductive material. Specifically, for example, ITO is preferably used as material of the cathode **34**. It is also possible to use mixtures of conductive metal oxides such as ITO and IZO with metals such as silver and magnesium, or a laminate of a metallic thin film such as silver and magnesium with conductive metal oxides.

The sealing film **40** covers the organic electroluminescence light-emitting elements **30** (the top surface **34***a* of the cathode **34**) over the plurality of pixels P. The sealing film **40** is a protective transparent film provided to prevent entry of oxygen and moisture to the organic layer **33** and other layers. The sealing film **40** of the present embodiment includes a first barrier layer **40***a*, a base layer **40***b*, an inter layer **40***c*, and a second barrier layer **40***d*.

The first barrier layer **40***a* serves to prevent entry of oxygen and moisture to the organic electroluminescence light-emitting element **30**. The first barrier layer **40***a* may be made of materials such as SiN, SiON, and SiO. However, the material is not limited to these, provided that it can block moisture and oxygen. The first barrier layer **40***a* is formed so as to cover the whole surface of the pixel P region of the display region D.

The top surface **40***a***1** of the first barrier layer **40***a* is covered with the base layer **40***b*. The base layer **40***b* has affinity to the material of the inter layer **40***c*. The base layer **40***b* is formed so as to cover the whole surface of the first barrier layer **40***a*. The base layer **40***b* may be made of materials, for example, such as a-Si (amorphous silicon), SiO_2, and SiO. However, the material is not limited to these, as long as it is lyophilic to the material of the inter layer **40***c*.

The inter layer **40***c* is locally formed on the top surface **40***b***1** of the base layer **40***b*. The inter layer **40***c* serves to cover local protruding portions on the top surface **40***b***1** of

the base layer **40***b*. The configuration of the inter layer **40***c* is described below in greater detail.

The second barrier layer **40***d* serves to prevent entry of oxygen and moisture to the organic electroluminescence light-emitting element **30**. The second barrier layer **40***d* may be made of materials such as SiN, SiON, and SiO. However, the material is not limited to these, as long as it can block moisture and oxygen. The second barrier layer **40***d* is formed so as to cover the whole surface of the pixel P region of the display region D.

FIG. **4** is a partially magnified view of region IV of the organic electroluminescence display device **1** shown in FIG. **1**. FIG. **5** is a schematic cross sectional view of the organic electroluminescence display device **1** of FIG. **4** at line V-V. Referring to FIGS. **4** and **5**, the cross section shows the state where the sealing film **40** covers a foreign object **41***a* such as dust adhering to the cathode **34** provided as the counter electrode in the pixel P region. FIG. **5** depicts an exemplary configuration in which the foreign object **41***a* forms a local protruding portion **41** when the barrier layer **40***a* and the base layer **40***b* are laminated thereon. For convenience of explanation, the counter substrate **50**, the filler **45**, and the second barrier layer **40***d* (described later) are omitted in FIG. **4**.

As used herein, "protruding portion **41**" refers to a raised portion of a height that exceeds the production tolerance specified for the irregularities that occur in the top surface **40***b***1** of the base layer **40***b* during the formation of the first barrier layer **40***a* and the base layer **40***b*. Specifically, for example, "protruding portion **41**" may represent a raised portion formed by a bubble that may occur during the production, or a raised portion formed by the foreign object **41***a*, for example, dust adhered to the cathode **34**, the first barrier layer **40***a*, or the base layer **40***b*.

In the embodiment below, the effect of the present invention is described through the case where the foreign object **41***a* has adhered to the cathode **34**. Specifically, the organic electroluminescence display device **1** will be described as having the protruding portion **41**. As illustrated in FIG. **5**, the portion **41** in the present embodiment is configured from the foreign object **41***a*, a first barrier layer covering **40***a***2** (a portion of the first barrier layer **40***a* covering the foreign object **41***a*), and abase layer covering **40***b***2** (a portion of the base layer **40***b* covering the first barrier layer covering **40***a***2**).

The inter layer **40***c* covers step S between the portion **41** and the top surface **40***b***1** of the base layer **40***b*. The portion of the inter layer **40***c* covering the step S will be referred to as a first covering portion **40***c***2**. The step S is the difference from a lower portion **41***c* (the portion of the portion **41** closest to the substrate **10**) to an upper portion **41***d* (the portion of the portion **41** farthest from the substrate **10**). The height of the step S is height d**1**.

The first covering portion **40***c***2** covers at least the upper portion **41***d* of the portion **41**. The first covering portion **40***c***2** of the present embodiment covers, for example, the whole surface of the portion **41**, and the top surface **40***b***1** of the base layer **40***b* over a certain range from the lower portion **41***c*.

Assume that the height to the top surface **40***c***1** of the first covering portion **40***c***2** with respect to the top surface **40***b***1** of the base layer **40***b* exposed from the inter layer **40***c* is height d**2**. In this case, covering the step S with the first covering portion **40***c***2** makes the height d**2** smaller than the height d**1**. Specifically, the surface formed by the top surface **40***c***1** of the inter layer **40***c* (first covering portion **40***c***2**) and the top surface **40***b***1** exposed from the inter layer **40***c* can have better flatness than the surface formed by the top surface **40***b***1** of the base layer **40***b* and the protruding portion **41**. That is, the inter layer **40***c* can serve to planarize the underlying irregularities below the inter layer **40***c*. As a result of forming the inter layer **40***c*, the film formed on the inter layer **40***c* is planarized, and fractures caused by the underlying steps and irregularities below the inter layer **40***c* can be prevented.

In addition to covering the step S, the inter layer **40***c* may be formed to cover, for example, a corner portion **42** of the top surface **40***b***1** of the base layer **40***b*. The corner portion **42** is the boundary between the top surface **40***b***1** of the base layer **40***b* in pixel P, and the top surface **40***b***1** of the base layer **40***b* on the pixel isolation film **14**. When the inter layer **40***c* covering the corner portion **42** is a second covering portion **40***c***3**, the second covering portion **40***c***3** is formed on the top surface **40***b***1**, along the inner periphery of the opening of the pixel isolation film **14**.

Preferably, the inter layer **40***c* formed in the plurality of pixels P is separated from one another between the adjacent pixels P. Specifically, for example, the inter layer **40***c*, including the first covering portion **40***c***2**, the second covering portion **40***c***3**, and an island-shaped inter layer **40***c* is formed on the top surface **40***b***1** of the base layer **40***b* in the pixel P, and these are separated from the inter layer **40***c* formed in the adjacent pixels P.

Thus, in the emission region, the contact angle α of each inter layer **40***c* formed on the top surface **40***b***1** with respect to the top surface **40***b***1** of the base layer **40***b* (the angle made by the top surface **40C1** of each inter layer **40***c* and the top surface **40***b***1** of the base layer **40***b*) becomes smaller than 90°. In the present embodiment, "emission region" means a region where the anode **32** and the organic layer **33** are in contact with each other, and that is exposed from the pixel isolation film **14**. The contact angle α is also smaller than contact angle β, an angle created between the pixel isolation film **14** and the anode **32**. Because the contact angle α is smaller than the contact angle β, the step created by the second barrier layer **40***d* covering the step formed by the pixel isolation film **14**, the anode **32**, and the second covering portion **40***c***3** is more gradual than the step created when the second barrier layer **40***d* directly covers the corner portion **42**. The inter layer **40***c* may also be formed in any other portions, provided that the inter layer **40***c* covers at least the step S.

The inter layer **40***c* is made of an insulator. The material of the inter layer **40***c* is preferably an organic material, and, specifically, acryl may be used. The material of the inter layer **40***c* is not limited to acryl. The material of the interlayer **40***c* is not limited, provided that the affinity between the material of the inter layer **40***c* and the material of the base layer **40***b* is higher than the affinity between the material of the inter layer **40***c* and the material of the second barrier layer **40***d* (described later). The base layer **40***b* can have smaller surface energy than the second barrier layer **40***d* when the inter layer **40***c*, the base layer **40***b*, and the second barrier layer **40***d* are made of materials that satisfy these conditions.

The second barrier layer **40***d* serves to prevent entry of oxygen and moisture to the inter layer **40***c* and other layers provided closer to the substrate **10** than the second barrier layer **40***d*. The second barrier layer **40***d* is made of SiN, and is formed so as to cover the top surface **40***b***1** of the base layer **40***b*, and the top surface **40***c***1** of the inter layer **40***c*.

The top surface of the sealing film **40** is covered by the counter substrate **50**, for example, via the filler **45**. The counter substrate **50** is, for example, a glass substrate having

a smaller outer perimeter than the substrate **10** in planar view, and is disposed opposite the substrate **10**. Specifically, for example, a color filter substrate may be used as the counter substrate **50**.

In the organic electroluminescence display device **1** of the embodiment of the present invention, the first covering portion **40***c***2** covers at least the step S created by protrusion of the portion **41** in the top surface **40***b***1** of the base layer **40***b* relative to the top surface **40***b***1** of the base layer **40***b*. In this way, the surface formed by the top surface **40***c***1** of the inter layer **40***c* (first covering portion **40***c***2**) and the top surface **40***b***1** exposed from the inter layer **40***c* can have better flatness than the surface formed by the top surface **40***b***1** of the base layer **40***b* and the protruding portion **41**, as compared to an organic electroluminescence display device that does not have the foregoing configuration.

Further, because the inter layer **40***c* is localized, any accidental moisture permeation and diffusion to a part of the inter layer **40***c* is confined within the local region of the inter layer **40***c* where the entry of moisture took place. Moisture diffusion through the inter layer **40***c* can thus be prevented more effectively than in an organic electroluminescence display device that does not have the foregoing configuration. This makes it possible to prevent spread of a detachment region in the interlayer **40***c* due to moisture diffusion. The organic electroluminescence display device **1** can thus have improved brightness and reliability.

Further, with the second covering portion **40***c***3** of the inter layer **40***c* covering the corner portion **42**, the top surface **40***b***1** of the base film **40***b* in the pixel P forms a gradual step with the top surface **40***b***1** of the base layer **40***b* on the pixel isolation film **14**. In this way, the second barrier layer **40***d* can be more uniformly covered inside and outside of the pixel P as compared to an organic electroluminescence display device that does not have the foregoing configuration. This prevents moisture entry to the inter layer **40***c*, and improves the reliability of the organic electroluminescence display device **1**.

Further, because the inter layer **40***c* formed in the plurality of pixels P is separated from one another between the adjacent pixels P, any accidental moisture entry to a part of the inter layer **40***c* does not spread to the adjacent pixels P from the pixel P in which the moisture has entered. This makes it possible to more effectively prevent moisture diffusion to the adjacent pixels P than in an organic electroluminescence display device that does not have the foregoing configuration.

When an organic material is used as the material of the inter layer **40***c*, and the base layer **40***b* is made of a material having affinity to the organic material, the inter layer **40***c* preferentially forms at the step S of the portion **41** and the top surface **40***b***1** of the base layer **40***b*, the corner portion **42** corresponding to the boundary between the anode **32** and the pixel isolation film **14**, and other irregular portions, as opposed to flat portions on the top surface **40***b***1** of the base layer **40***b*. Formation of the inter layer **40***c* can thus be controlled in a manner allowing it to be formed locally in step portions such as in step S, and not formed in flat portions in the pixel P, and in flat portions on the pixel isolation film **14**.

A manufacturing method of the organic electroluminescence display device **1** according to an embodiment of the present invention is described below with reference to the accompanying drawings. FIG. **6** is a schematic cross sectional view at line V-V, explaining the organic electroluminescence display device manufacturing method of the embodiment of the present invention. The figure depicts a configuration before the sealing film **40** is formed.

The manufacturing method of the organic electroluminescence display device **1** of the present embodiment includes the step of forming the circuit layer **12**, the organic electroluminescence light-emitting element **30**, the sealing film **40**, and the counter substrate **50** on the substrate **10**.

First, the insulating substrate **10** is prepared. Thereafter, for example, the polysilicon semiconductor layer **11***a*, the gate insulating layer **11***b*, the gate electrode **11***c*, the source-drain electrode **11***d*, the first insulating film **11***e*, and the second insulating film **11***f* are laminated in the display region D of the substrate **10** to form the thin film transistor **11**. This is followed by formation of the circuit layer **12** by forming the passivation film **13** of insulating material over the thin film transistor **11**.

The contact hole **32***a* to be connected to the thin film transistor **11** is then formed in the passivation film **13** and the second insulating film **11***f*. The metallic reflecting film **31** is then formed on the passivation film **13** in a region corresponding to each pixel P.

Thereafter, the organic electroluminescence light-emitting element **30** is formed for each pixel P on the substrate **10**, via the circuit layer **12**. The step of forming the organic electroluminescence light-emitting element **30** includes a step of forming the anode **32**, a step of forming the organic layer **33** that has at least a light-emitting layer, and a step of forming the cathode **34**.

First, the anode **32**, made of, for example, a translucent conductive material such as ITO (Indium Tin Oxide), is formed on the passivation film **13** (reflecting film **31**) in a region corresponding to each pixel P, using a method, for example, such as sputtering. Upon formation, the anode **32** is electrically connected to the thin film transistor **11** via the contact hole **32***a*. The reflecting film **31** becomes part of the anode **32** when the anode **32** is formed in contact with the top surface of the metallic reflecting film **31**.

The pixel isolation film **14** made of photosensitive insulating material is then formed in a portion of the region between the adjacent pixels P by, for example, photolithography. The pixel isolation film **14** is first deposited over the surface of the display region D. An opening that exposes the top surface of the anode **32** of each pixel P is then formed so as not to expose the end portion of the anode **32** provided as the pixel electrode. As a result, the pixel isolation film **14** is formed that covers the outer periphery of the anode **32** in the form of a bank.

Thereafter, the organic layer **33** having a light-emitting layer is formed on the anode **32**. The organic layer **33** is formed, for example, by laminating the hole injection layer, the hole transport layer, the light-emitting layer, the electron transport layer, and the electron injection layer (not illustrated) in order from the anode **32** side. The organic layer **33** may be formed by using known methods, for example, such as a vacuum vapor deposition method, a nozzle printing method, a spin coating method, a slit coating method, an inkjet method, and relief printing.

The cathode **34**, made of a translucent conductive material such as ITO, is formed over the organic layer **33** so as to cover the whole surface of the pixel P region of the display region D, using a method, for example, such as sputtering. The cathode **34** formed commonly contacts the organic layer **33** of the organic electroluminescence light-emitting element **30** disposed in each pixel P.

FIG. **7** is a schematic cross sectional view at line V-V explaining the manufacturing method of the organic electroluminescence display device **1** according to the embodi-

ment of the present invention. In the present embodiment, the step of forming the sealing film **40** is described by using an exemplary configuration in which the foreign object **41***a* is adhering to the top surface **34***a* of the cathode **34** in pixel P.

The step of forming the sealing film **40** includes a step of forming the first barrier layer **40***a* so as to cover the organic electroluminescence light-emitting element **30** over the plurality of pixels P, a step of forming the base layer **40***b* so as to cover the top surface **40***a***1** of the first barrier layer **40***a*, and a step of locally forming the inter layer **40***c* on the top surface **40***b***1** of the base layer **40***b*. In the sealing film forming step described below with reference to the flow of FIG. **9**, the sealing film **40** is formed in the pixel P region. However, the sealing film **40** may be simultaneously formed also in peripheral region **10***a***1** where the organic electroluminescence light-emitting element **30** is not formed.

First, the first barrier layer **40***a* is formed so as to cover the whole surface of the pixel P region of the display region D, using, for example, a plasma CVD method. The method used to form the first barrier layer **40***a* is not limited to a plasma CVD method, and may be any method selected from, for example, sputtering, vapor deposition, sublimation, CVD (chemical vapor deposition method), ECR-PECVD (electron cyclotron resonance-plasma enhanced chemical vapor deposition method), and a combination of these. Desirably, the first barrier layer **40***a* is formed by using SiN. A film denser than a SiO_2 film can be formed by forming the first barrier layer **40***a* as a SiN film. In this way, moisture entry from outside can be prevented more effectively than with a barrier layer made from a SiO_2 film.

The first barrier layer **40***a* formed covers the organic electroluminescence light-emitting element **30** (top surface **34***a* of the cathode **34**) and the foreign object **41***a* over the plurality of pixels P. The portion of the first barrier layer **40***a* covering the foreign object **41***a* will be referred to as first barrier layer covering **40***a***2**.

When the portion where the foreign object **41***a* contacts the top surface **34***a* of the cathode **34** is a contact surface **41***b*, the foreign object **41***a* obstructs the deposition of the first barrier layer **40***a* on the top surface **34***a* around the contact surface **41***b* when the material of the first barrier layer **40***a* is vapor deposited on the top surface **34***a*. The first barrier layer **40***a* thus becomes thinner in a portion covering the top surface **34***a* around the contact surface **41***b* than in outer portions, as depicted in FIG. **7**.

Thereafter, the base layer **40***b* of, for example, amorphous silicon is formed so as to cover the top surface **40***a***1** of the first barrier layer **40***a*, using a plasma CVD method. The method used to form the base layer **40***b* is not limited to a plasma CVD method, and may be any method selected from, for example, sputtering, vapor deposition, sublimation, CVD (chemical vapor deposition method), ECR-PECVD (electron cyclotron resonance-plasma enhanced chemical vapor deposition method), and a combination of these. The material of the base layer **40***b* is not limited to amorphous silicon, and may be, for example, SiO_2 or SiO. Other materials also may be used, provided that these are lyophilic to the material of the inter layer **40***c*.

The base layer **40***b* formed covers the top surface **40***a***1** of the first barrier layer **40***a*, and the first barrier layer covering **40***a***2**. As a result, the protruding portion **41** is formed that is configured from the foreign object **41***a*, the first barrier layer covering **40***a***2**, and the base layer covering **40***b***2** (a portion of the base layer **40***b* covering the first barrier layer covering **40***a***2**).

In the vapor deposition of the material of the base layer **40***b* on the top surface **40***a***1**, the foreign object **41***a* and the first barrier layer covering **40***a***2** obstruct the deposition of the material to the top surface **40***a***1** around the contact surface **41***b*. The base layer **40***b* thus becomes thinner in a portion around the contact surface **41***b* than in the outer portions.

The protruding portion **41** is not limited to the foregoing configuration, provided that the protruding portion **41** is a raised portion of a height that exceeds the production tolerance specified for the irregularities that occur in the top surface **40***b***1** of the base layer **40***b* during the formation of the first barrier layer **40***a* and the base layer **40***b*. For example, the protruding portion **41** may be a raised portion formed during the production, including a raised portion due to bubbles, or a raised portion formed by the foreign object **41***a*, for example, dust adhered to the first barrier layer **40***a* or the base layer **40***b*.

FIG. **8** is a schematic cross sectional view at line V-V explaining the manufacturing method of the organic electroluminescence display device **1** according to the embodiment of the present invention. The inter layer **40***c* made of an insulator is locally formed on the top surface **40***b***1** of the base layer **40***b*. In the step of forming the inter layer **40***c*, the deposition of the inter layer **40***c* is stopped once the inter layer **40***c* is formed on the step S and the corner portion **42**, instead of covering the whole surface of the base layer **40***b*.

The material of the inter layer **40***c* is preferably an organic material, particularly preferably acryl. The material of the inter layer **40***c* is not limited to acryl, and any material may be used, as long as it has higher affinity to the material of the base layer **40***b* than to the material of the second barrier layer **40***d* (described later). Further, the material of the inter layer **40***c* is preferably one that more preferentially adheres to the step S and the corner portion **42** than to the top surface **40***b***1** of the base layer **40***b* during the formation of the inter layer **40***c*.

By using materials satisfying such conditions, the inter layer **40***c* formed with such materials covers at least the step S created by the portion **41** relative to the top surface **40***b***1** of the base layer **40***b*. The portion of the inter layer **40***c* covering the step S will be referred to as first covering portion **40***c***2**.

Upon forming the inter layer **40***c*, the first covering portion **40***c***2** covers at least the upper portion **41***d* of the portion **41**. The first covering portion **40***c***2** of the present embodiment covers, for example, the whole surface of the portion **41**, and the top surface **40***b***1** of the base layer **40***b* around the portion **41**.

Assume that the height to the top surface **40***c***1** of the first covering portion **40***c***2** with respect to the top surface **40***b***1** of the base layer **40***b* exposed from the inter layer **40***c* is height d**2**. In this case, covering the step S with the first covering portion **40***c***2** makes the height d**2** smaller than the height d**1**. Specifically, the surface formed by the top surface **40***c***1** of the inter layer **40***c* (first covering portion **40***c***2**) and the top surface **40***b***1** exposed from the inter layer **40***c* can have better flatness than the surface formed by the top surface **40***b***1** of the base layer **40***b* and the protruding portion **41**.

In addition to covering the step S, the inter layer **40***c* may be formed to cover, for example, the corner portion **42** of the top surface **40***b***1** of the base layer **40***b*. The corner portion **42** is the boundary between the top surface **40***b***1** of the base layer **40***b* in the pixel P, and the top surface **40***b***1** of the base layer **40***b* on the pixel isolation film **14**. When the inter layer **40***c* covering the corner portion **42** is a second covering

portion **40**c**3**, the second covering portion **40**c**3** is formed on the top surface **40**b**1**, along the inner periphery of the opening of the pixel isolation film **14**.

By covering the protruding portion **41** with the second covering portion **40**c**3** of the inter layer **40**c, the surface formed by the top surface **40**c**1** of the inter layer **40**c and the top surface **40**b**1** exposed from the inter layer **40**c can have better flatness than the surface formed by the top surface **40**b**1** of the base layer **40**b and the protruding portion **41**.

Preferably, the inter layer **40**c is separated from one another between the adjacent pixels P. Specifically, for example, the inter layer **40**c, including the first covering portion **40**c**2**, the second covering portion **40**c**3**, and an island-shaped inter layer **40**c are formed on the top surface **40**b**1** of the base layer **40**b in the pixel P, and these are separated from the inter layer **40**c formed in the adjacent pixels P.

Thus, the contact angle α of each inter layer **40**c formed on the top surface **40**b**1** with respect to the top surface **40**b**1** (the angle made by the top surface **40C1** of each inter layer **40**c and the top surface **40**b**1**) becomes smaller than 90°. The inter layer **40**c may also be formed in any other portions, provided that the inter layer **40**c covers at least the step S.

Thereafter, the second barrier layer **40**d is formed so as to cover top surface **40**b**1** of the base layer **40**b, and the top surface **40**c**1** of the inter layer **40**c, using, for example, a plasma CVD method. The method used to form the second barrier layer **40**d is not limited to a plasma CVD method, and may be selected from any methods. Desirably, the second barrier layer **40**d is formed of SiN, as with the case of the first barrier layer **40**a. A film denser than a SiO_2 film can be formed with the SiN film, and moisture entry from outside can be prevented. The sealing film **40** is formed after these steps.

The wires (not illustrated) formed in the peripheral region **10**a**1** can be protected by forming the sealing film **40** in the peripheral region **10**a**1**. When the sealing film **40** is formed over the whole surface of the substrate **10**, the sealing film **40** may be removed from the connection terminals of the driver **3** and the flexible circuit board **2** after the formation. In this way, the connection terminals can be formed in regions where the sealing film **40** was removed.

Thereafter, the counter substrate **50** is disposed on the sealing film **40** via the filler **45** to form the organic electroluminescence display device **1** shown in FIG. **5**. The present embodiment has been described through the configuration in which the protruding portion **41** is formed on the top surface **40**b**1** of the base layer **40**b in pixel P. However, because the protruding portion **41** is a foreign object, it is desirable not to have the protruding portion **41** in the pixel P. When there is no foreign object, the inter layer **40**c is formed along the corner portion **42**, and planarizes the top surface **40C1** in the pixel P region, as shown in FIG. **3**.

In the manufacturing method of the organic electroluminescence display device **1** of the embodiment of the present invention, the inter layer **40**c is formed on the base layer **40**b, and the first covering portion **40**c**2** covers the step S created by protrusion of the portion **41** in the top surface **40**b**1** of the base layer **40**b relative to the top surface **40**b**1** of the base layer **40**b. In this way, the surface formed by the top surface **40**c**1** of the inter layer **40**c (first covering portion **40**c**2**) and the top surface **40**b**1** exposed from the inter layer **40**c can have better flatness than the surface formed by the top surface **40**b**1** of the base layer **40**b and the protruding portion **41**, as compared to an organic electroluminescence display device manufacturing method that does not have the present configuration.

Further, because the inter layer **40**c is localized, any accidental moisture permeation and diffusion to a part of the inter layer **40**c is confined within the local region of the inter layer **40**c where the entry of moisture took place. The organic electroluminescence display device **1** can thus prevent moisture diffusion through the inter layer **40**c, and detachment due to moisture permeation more effectively than an organic electroluminescence display device produced by a manufacturing method that does not have the present configuration. The organic electroluminescence display device **1** can thus have improved brightness and reliability. The yield of the organic electroluminescence display device **1** also can be improved.

Further, with the second covering portion **40**c**3** of the inter layer **40**c formed along the corner portion **42**, the angle α made by the slope of the top surface of the second barrier layer **40**d at the slanted surface of the pixel isolation film **14** becomes smaller than the angle β made by the slope of the top surface of the first barrier layer **40**a at the slanted surface of the pixel isolation film **14**. Specifically, the angle α created by the top surface **40**c**1** of the inter layer **40**c (second covering portion **40**c**3**) covering the corner portion **42** with respect to the top surface **40**b**1** of the base layer **40**b becomes smaller than the angle β created by the slanted surface of the pixel isolation film **14** and the top surface of the anode **32**. Accordingly, the step created by the second barrier layer **40**d covering the step configured from the pixel isolation film **14**, the anode **32**, and the second covering portion **40**c**3** becomes more gradual than the step created by the second barrier layer **40**d directly covering the corner portion **42**. In this way, the second barrier layer **40**d can be more uniformly covered inside and outside of the pixel P as compared to an organic electroluminescence display device manufacturing method that does not have the present configuration, and can be prevented from fracture due to the step. This makes it possible to prevent moisture entry to the inter layer **40**c, and improve the reliability of the organic electroluminescence display device **1**.

Further, because the inter layer **40**c formed is separated from one another between the adjacent pixels P, any accidental moisture entry to a part of the inter layer **40**c does not spread to the adjacent pixels P from the pixel P in which the moisture has entered. The organic electroluminescence display device **1** can thus more effectively prevent moisture diffusion to the adjacent pixels P as compared to an organic electroluminescence display device produced by a manufacturing method that does not have the present configuration.

Further, by forming the inter layer **40**c with an organic material, the affinity between the material of the base layer **40**b and the material of the inter layer **40**c can be increased more than in an organic electroluminescence display device manufacturing method that does not have the present configuration. This eliminates the need to form the inter layer **40**c over the whole surface of the inter layer **40**b. Thus, it becomes easier to locally form the inter layer **40**c, and more effectively prevent moisture diffusion.

FIG. **10** is a plan view of pixels P of the organic electroluminescence display device **1** according to the embodiment of the present invention. FIG. **11** is a schematic cross sectional view taken at line XI-XI of FIG. **10**. For convenience of explanation, FIG. **11** only shows the configuration from the passivation film **13** to the sealing film **40**.

The organic electroluminescence display device shown in FIGS. **10** and **11** have the same configuration as that described with reference to FIG. **3**. Specifically, the pixel formed on the substrate includes a thin film transistor **11**, a pixel electrode (anode) **32** controlled by the thin film tran-

sistor **11**, an organic layer **33** disposed on the anode **32**, and a counter electrode (cathode) **34** disposed on the organic layer **33**. Accordingly, these constituting elements will not be described.

The pixel P formed for each pixel electrode **32** is covered with the common sealing film **40**. The sealing film **40** on the pixels P includes a first region PA**1** where the first barrier layer **40***a*, the base layer **40***b*, and the second barrier layer **40***d* are laminated, and a second region AP**2** where the first barrier layer **40***a*, the base layer **40***b*, the inter layer **40***c*, and the second barrier layer **40***d* are laminated.

The first region PA**1** overlaps the emission region of the pixel P. The second barrier layer **40***d* is directly laminated on the base layer **40***b* in the first region PA**1**, and the second barrier layer **40***d* more strongly adheres to the base layer **40***b* than in a display device that does not have the present configuration. The second barrier layer **40***d* can thus be prevented from being detached from the base layer **40***b*. The second region PA**2** is formed over an area from a part of the emission region of the pixel P to a region overlapping a part of the pixel isolation film **14** provided as an insulating film.

As illustrated in FIG. **10**, the first region PA**1** is surrounded by the second region PA**2** in planar view, and the inter layer **40***c* is not formed in a central portion of the emission region (the region of the organic layer **33** sandwiched between the anode **32** and the cathode **34** in contact therewith) E. The emission region E can thus have a smaller area of the inter layer **40***c* region than in an organic electroluminescence display device of related art in which the inter layer **40***c* is formed throughout the emission region E. This makes it possible to suppress attenuation of the emitted light from the organic layer **33**, and the organic electroluminescence display device **1** can have improved luminance.

In the embodiment of the present invention, the localized formation of the inter layer **40***c* is made possible by the base layer **40***b* made of a material having affinity to the inter layer **40***c* and provided on the first barrier layer **40***a*. The inter layer **40***c* thus more preferentially forms on the step S and the corner portion **42** than on the flat regions, and can be selectively formed only on the step S and the corner portion **42**.

In the organic electroluminescence display device **1** of the present embodiment, the sealing film **40** can have more desirable adhesion and sealing performance than in an organic electroluminescence display device that does not have the present configuration. This makes it possible to suppress detachment of the sealing film **40**, and improve the viewability and the coupling-out efficiency of the organic electroluminescence display device **1**.

EXAMPLES

The organic electroluminescence display device **1**, and the manufacturing method thereof according to the embodiment of the present invention are described below in greater detail using Examples. It should be noted that the present invention is not limited by the following Examples.

Example 1

First, the circuit layer **12** was formed on the insulating substrate **10**, followed by formation of the anode **32**, the pixel isolation film **14**, the organic layer **33** having at least a light-emitting layer, and the cathode **34**. As a result, the organic electroluminescence light-emitting element **30** was formed for each pixel P, as shown in FIG. **6**.

Thereafter, the first barrier layer **40***a*, made of SiN and having a thickness of 500 nm, was formed on the organic electroluminescence light-emitting element **30** (on the cathode **34**) by using a plasma CVD method with SiH_4, NH_3, and N_2 gas materials, as shown in FIG. **7**. The substrate temperature was brought to 100° C. or less during the deposition of the first barrier layer **40***a*.

The base layer **40***b*, made of amorphous silicon and having a thickness of 2 nm, was then formed so as to cover the top surface **40***a***1** of the first barrier layer **40***a*, using a plasma CVD method with a SiH_4 gas material. The substrate temperature was brought to 100° C. or less during the deposition of the base layer **40***b*.

Thereafter, acryl was applied to the top surface **40***b***1** of the base layer **40***b*. The applied acryl locally covered only the protruding portion **41** and the corner portion **42**. The acryl was then polymerized by UV irradiation to form the inter layer **40***c* shown in FIG. **8**.

The second barrier layer **40***d*, made of SiN and having a thickness of 500 nm, was then formed so as to cover the top surface **40***b***1** of the base layer **40***b* and the top surface **40***c***1** of the inter layer **40***c*, using a plasma CVD method with SiH_4, NH_3, and N_2 gas materials. The substrate temperature was brought to 100° C. or less during the deposition of the second barrier layer **40***d*. The sealing film **40** was formed after these steps.

Thereafter, the counter substrate **50** was bonded to the sealing film **40** after being coated with a 6 μm-thick sealant BM and the filler **45**. This completed the organic electroluminescence display device **1** shown in FIG. **5**.

The organic electroluminescence display device **1** obtained in the example was tested in an 85° C., 85% humidity atmosphere. The observed result did not show any sign of spread of dark spots in the emission region, or delamination of the sealing film **40** due to moisture entry into the sealing film **40**. It was thus confirmed that moisture diffusion from the point of moisture entry in the sealing film **40** was suppressed.

Comparative Example 1

The inter layer **40***c* was formed so as to cover the top surface **40***a***1** of the first barrier layer **40***a*, without forming the base layer **40***b*. The inter layer **40***c* formed covered the whole surface of the pixel P region of the top surface **40***a***1**. The organic electroluminescence display device was completed in the same manner as in Example 1.

The organic electroluminescence display device **1** obtained in the comparative example was tested in an 85° C., 85% humidity atmosphere. The observed result showed signs of spread of dark spots in the emission region, and delamination of the sealing film **40** due to moisture entry into the sealing film **40**. It was thus confirmed that moisture diffusion occurred from the point of moisture entry in the sealing film **40**.

While there have been described what are at present considered to be certain embodiments of the invention, it will be understood that various modifications may be made thereto, and it is intended that the appended claim cover all such modifications as fall within the true spirit and scope of the invention.

What is claimed is:

1. A display device comprising:

a first substrate;

a plurality of organic light emitting elements on the first substrate; and a sealing film covering the organic light emitting elements, the sealing film including a first

barrier layer, a base layer including silicon oxide or amorphous silicon on the first barrier layer, an organic layer on the base layer, and a second barrier layer on the base layer and the organic layer, a first thickness of the first barrier layer being thicker than a second thickness of the base layer,

wherein the first barrier layer includes silicon nitride or silicon oxynitride, and the second barrier layer includes silicon nitride or silicon oxynitride,

the base layer and the second barrier layer are in contact with each other,

the base layer and the first barrier layer are in contact with each other; and further comprising:

a filler on the sealing film; and

a second substrate on the filler.

2. The display device according to claim **1**, wherein the sealing film includes:

a first region where the first barrier layer, the base layer, and the second barrier layer are laminated and the second barrier layer is in physical contact with the base layer, and

a second region where the first barrier layer, the base layer, the organic layer, and the second barrier layer are laminated.

3. The display device according to claim **1**, further comprising a plurality of second regions including the second region,

wherein the first region is arranged between two of the second regions in a cross-sectional view.

4. The display device according to claim **1**, further comprising:

an electrode between the first substrate and the sealing film; and

an insulation film, which is arranged between the electrode and the sealing film, exposes a part of the electrode and covers an edge of the electrode.

5. The display device according to claim **4**, wherein the sealing film covers both the insulation film and the part of the electrode.

6. The display device according to claim **4**, wherein a first contact angle of the organic layer with respect to the base layer is smaller than a second contact angle of the insulation film with respect to the electrode.

7. A display device comprising:

a first substrate;

an underling layer which is arranged on the first substrate, includes a plurality of organic light emitting elements, and has a first horizontal surface, a second horizontal surface, and an inclined surface between the first horizontal surface and the second horizontal surface; and

a sealing film including a first inorganic insulation layer, an organic layer on the first inorganic insulation layer, and a second inorganic insulation layer on the organic layer and the first inorganic insulation layer, wherein

a first distance between the first substrate and the first horizontal surface is longer than a second distance between the first substrate and the second horizontal surface,

the first inorganic insulation layer has a corner portion just above a boundary between the second horizontal surface and the raised inclined surface in a cross-sectional view, the organic layer is arranged just above the corner portion in the cross-sectional view,

the organic layer has an upper surface having a first end portion and a second end portion,

the first inorganic insulation-layer, the second inorganic insulation layer, and the organic insulation layer are in contact with each other at the first end portion,

the first inorganic insulation layer, the second inorganic insulation layer, and the organic layer are in contact with each other at the second end portion, and

the upper surface having a curved shape which dents toward the corner portion in the cross-sectional view; and further comprising:

a filler on the sealing film; and

a second substrate on the filler.

8. The display device according to claim **7**, wherein

the first inorganic insulation layer has a first thickness,

the sealing film includes a base layer between the first inorganic insulation layer and the organic layer,

the base layer includes silicon oxide or amorphous silicon on the first inorganic insulation layer and has a second thickness being smaller than the first thickness,

the first inorganic insulation layer includes silicon nitride or silicon oxynitride, and

the second inorganic insulation layer includes silicon nitride or silicon oxynitride.

9. The display device according to claim **8**, wherein the sealing film includes:

a first region where the first inorganic insulation layer, the base layer, and the second inorganic insulation layer are laminated without the organic layer; and

a second region where the first inorganic insulation layer, the base layer, the organic layer, and the second inorganic insulation layer are laminated.

10. The display device according to claim **9**, further comprising a plurality of second regions including the second region,

wherein the first region is arranged between two of the second regions in the cross-sectional view, and

wherein the first inorganic insulation layer includes a first barrier layer, and the second inorganic insulation layer includes a second barrier layer.

11. A display device comprising:

a first substrate;

an underling layer which is arranged on the first substrate, includes a plurality of pixels, and has a first horizontal surface, a second horizontal surface, and a raised an inclined surface between the first horizontal surface and the second horizontal surface; and

a sealing film covering the underling layer, the sealing film including a first barrier layer, a base layer including silicon oxide or amorphous silicon on the first barrier layer, an organic layer on the base layer, and a second barrier layer on the base layer and the organic layer, a first thickness of the first barrier layer being thicker than a second thickness of the base layer, wherein the first barrier layer includes a first compound inorganic material of silicon and nitride, and the second barrier layer includes a second compound inorganic material of silicon and nitride, wherein

each of the plurality of pixels includes an organic light emitting element and a pixel circuit connected to the organic emitting element,

a first distance between the first substrate and the first horizontal surface is longer than a second distance between the first substrate and the second horizontal surface,

the organic layer is arranged just above a boundary between the second horizontal surface and the raised horizontal surface in a cross-sectional view,

the base layer and the second barrier layer are in contact with each other,

the base layer and the first barrier layer are in contact with each other,

the organic layer has an upper surface having a first end portion and a second end portion,

the base layer, the second barrier layer, and the organic layer are in contact with each other at the first end portion,

the base layer, the second barrier layer, and the organic layer are in contact with each other at the second end portion, and

the upper surface having a curved shape which dents toward the boundary in the cross-sectional view; and further comprising:

a filler on the sealing film; and

a second substrate on the filler.

12. The display device according to claim **11**, wherein the sealing film includes:

a first region where the first barrier layer, the base layer, and the second barrier layer are laminated and the second barrier layer is in physical contact with the base layer; and

a second region where the first barrier layer, the base layer, the organic layer, and the second barrier layer are laminated.

13. The display device according to claim **12**, further comprising a plurality of second regions including the second region, and

wherein the first region is arranged between two of the second regions in a cross-sectional view.

14. The display device according to claim **11**, further comprising:

an electrode between the first substrate and the sealing film; and

an insulation film which is arranged between the electrode and the sealing film, exposes a part of the electrode, and covers an edge of the electrode.

15. The display device according to claim **14**, wherein the sealing film covers both the insulation film and the part of the electrode.

16. The display device according to claim **14**, wherein a first contact angle of the organic layer with respect to the base layer is smaller than a second contact angle of the insulation film with respect to the electrode.

* * * * *

专利名称(译)	显示设备		
公开(公告)号	US10367167	公开(公告)日	2019-07-30
申请号	US15/728993	申请日	2017-10-10
[标]申请(专利权)人(译)	株式会社日本显示器		
申请(专利权)人(译)	日本展示INC.		
当前申请(专利权)人(译)	日本展示INC.		
[标]发明人	KAMIYA AKINORI		
发明人	KAMIYA, AKINORI		
IPC分类号	H01L51/50 H01L27/32 H01L51/52 H01L51/56		
CPC分类号	H01L51/5253 H01L27/3244 H01L27/3246 H01L51/5016 H01L51/5056 H01L51/5088 H01L51/5092 H01L51/5234 H01L51/5271 H01L51/56 H01L51/5072 H01L51/5237 H01L27/3248 H01L51/524 H01L27/3258 H01L27/3262 H01L51/502 H01L51/5246 H01L2227/32		
优先权	2013053469 2013-03-15 JP 14/210907 2015-10-13 US		
其他公开文献	US20180047939A1		
外部链接	Espacenet		

摘要(译)
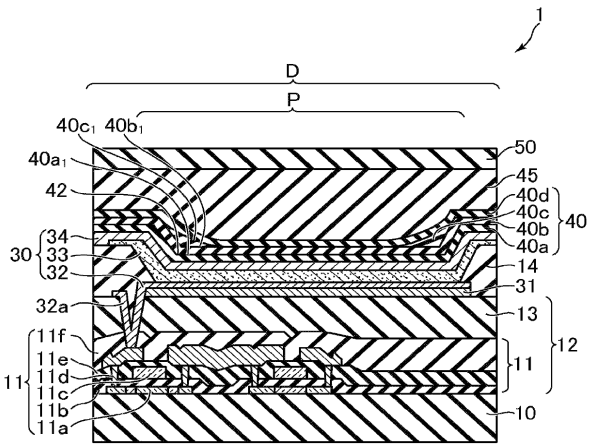
本发明实施方式的有机电致发光显示装置包括基板，形成在基板上的多个像素，以及覆盖多个像素的密封膜。密封膜包括第一阻挡层，覆盖第一阻挡层顶表面的基层，局部形成在基层顶表面上的中间层，以及覆盖基层顶表面的第二阻挡层和夹层的顶面。形成中间层以覆盖基层的台阶或顶表面。